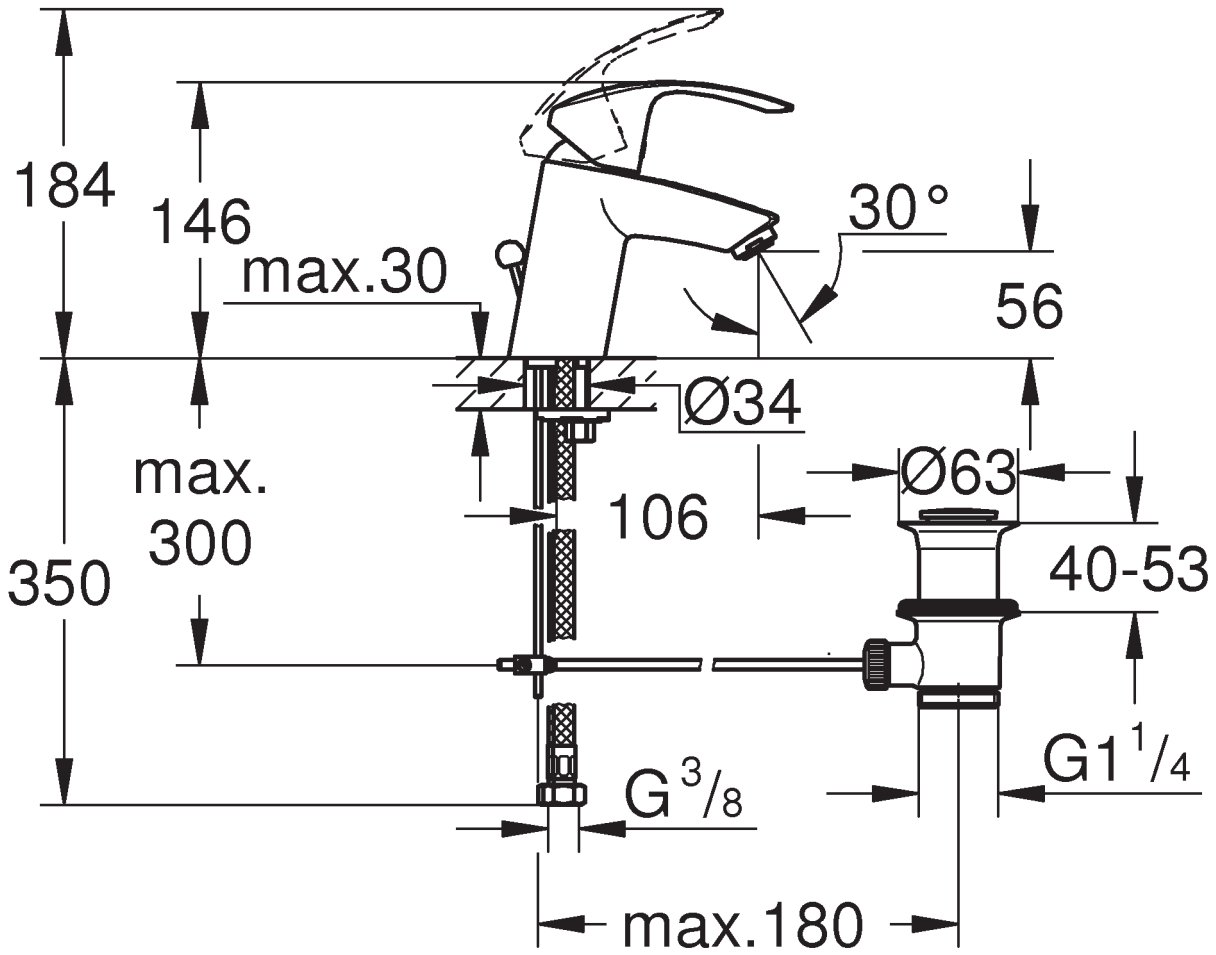
184
146
max.30
30°
56
Ø34
max.
300
350
106
Ø63
40-53
G1 1/4
G 3/8
max.180

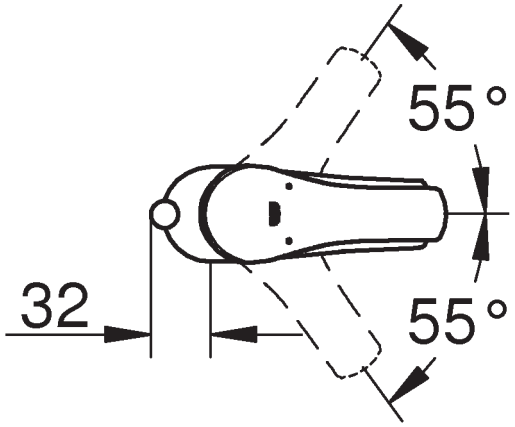
55°
32
55°