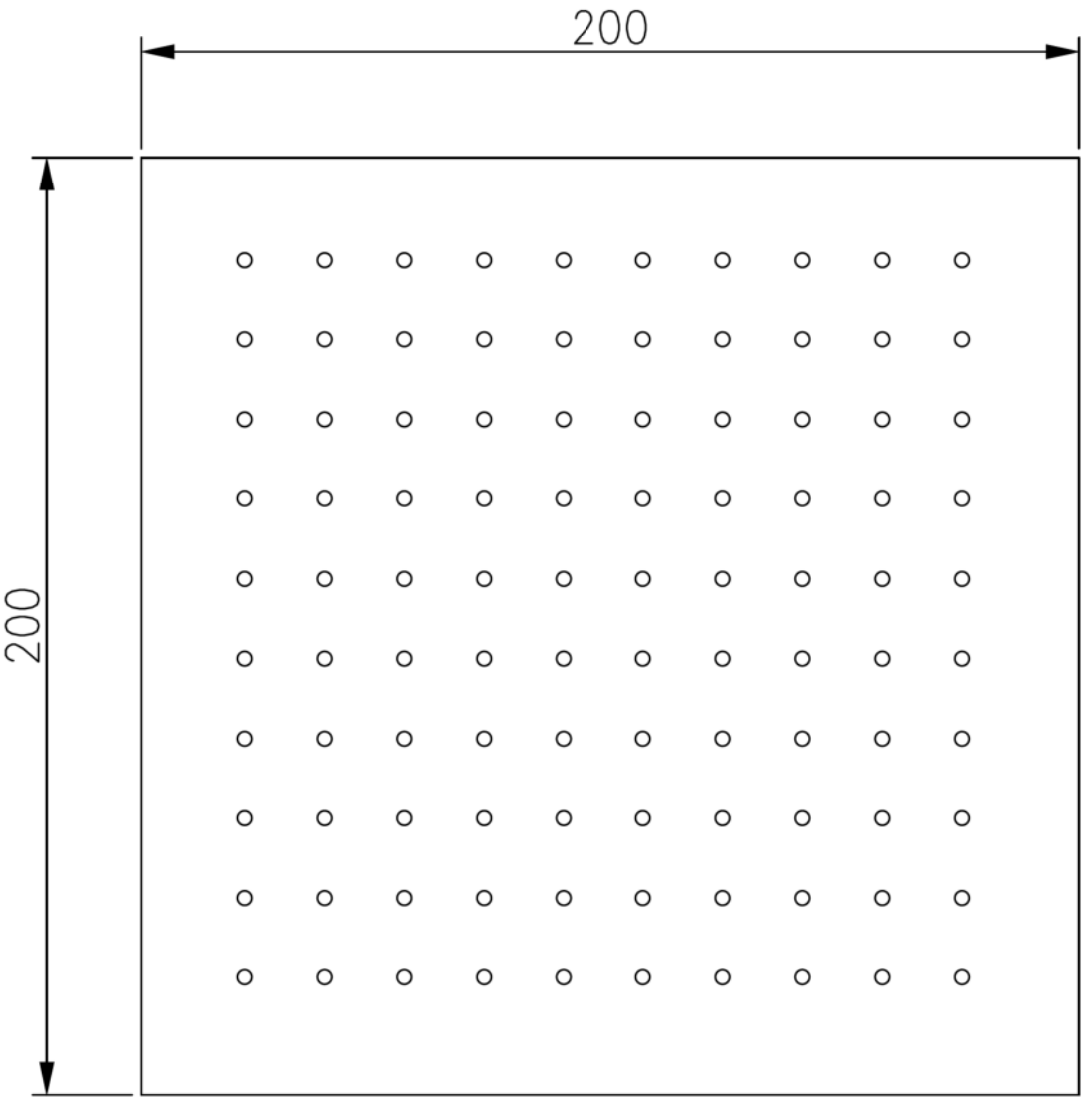
200
200

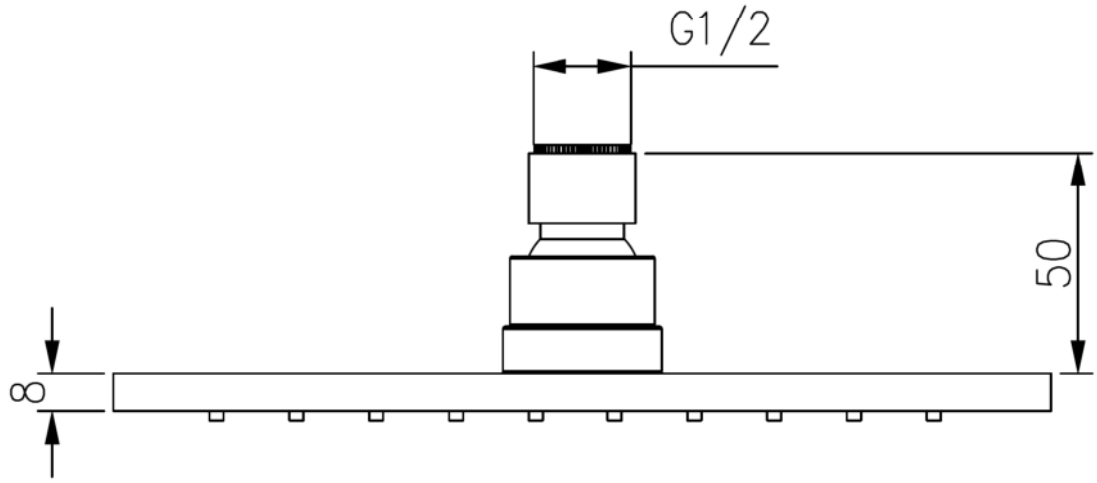
G1/2
50
8