PIUSI

CONTALITRI K33/K44
METER K33/K44
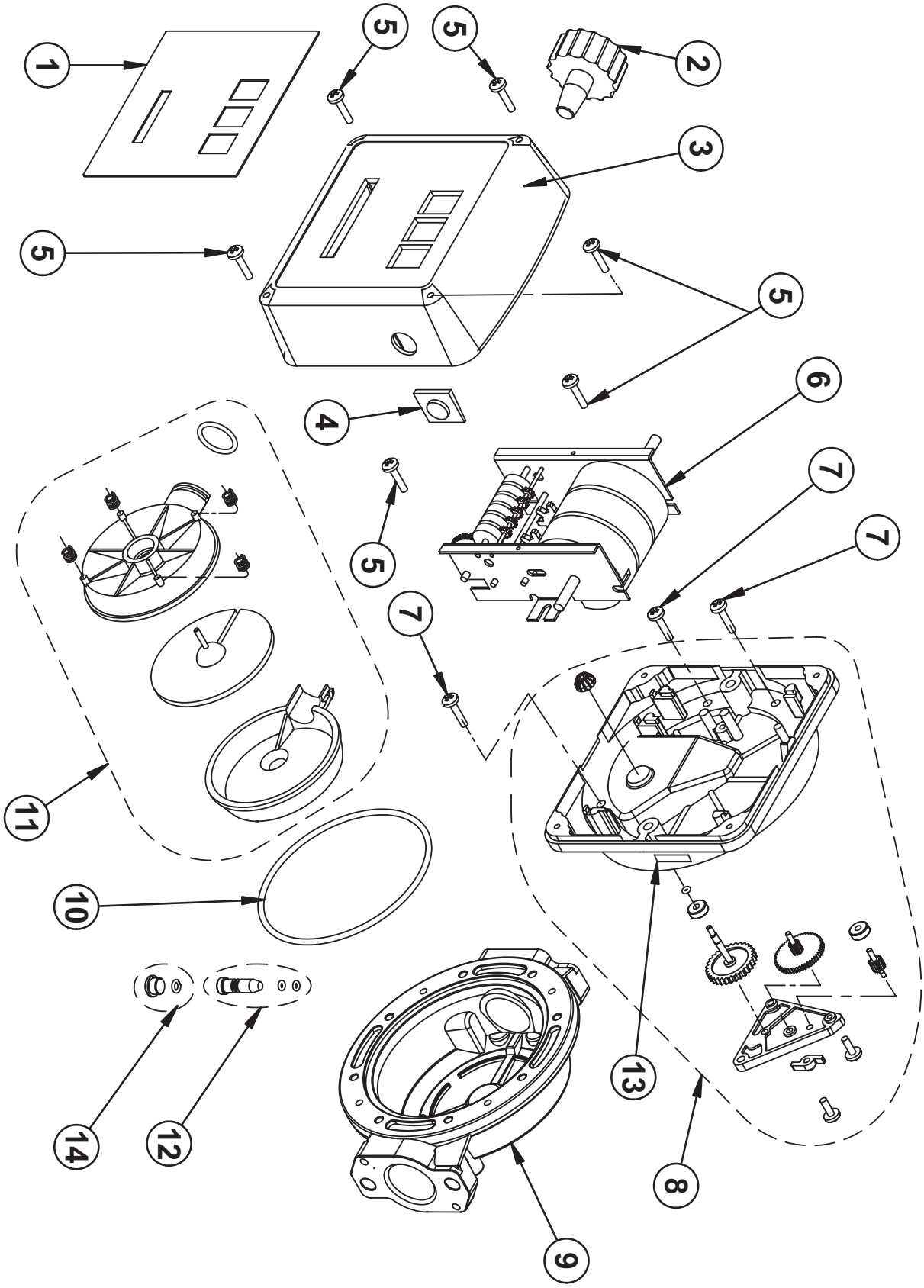
LR_C00010